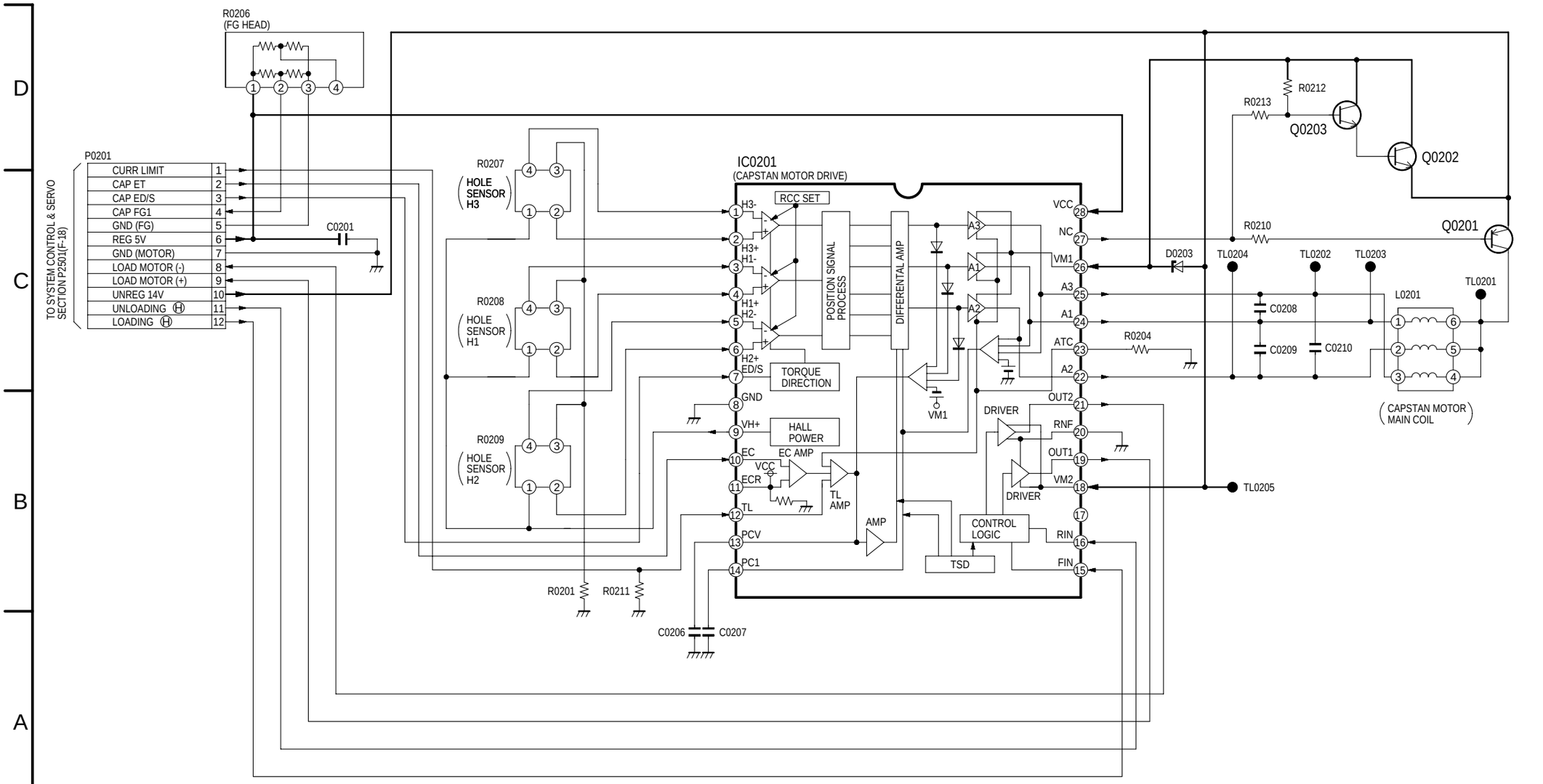

NV-FJ623EG/EGY,FJ628EE
CAPSTAN UNIT SCHEMATIC DIAGRAM